7. Oil Pipe

A: REMOVAL

1) Disconnect the ground cable from battery.

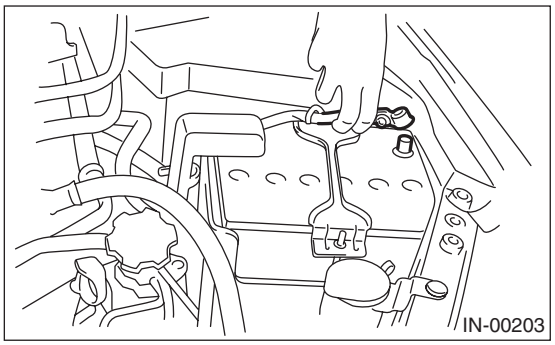

2) Remove the intake manifold. <Ref. to FU(H4DOTC)-17, REMOVAL, Intake Manifold.>
3) Remove the radiator main fan and radiator sub fan. <Ref. to CO(H4DOTC)-30, REMOVAL, Radiator Main Fan and Fan Motor.> <Ref. to CO(H4DOTC)-32, REMOVAL, Radiator Sub Fan and Fan Motor.>
4) Remove the V-belts. <Ref. to ME(H4DOTC)-44, REMOVAL, V-belt.>
5) Remove the crank pulley. <Ref. to ME(H4DOTC)-46, REMOVAL, Crank Pulley.>
6) Remove the timing belt cover. <Ref. to ME(H4DOTC)-47, REMOVAL, Timing Belt Cover.>
7) Remove the timing belt. <Ref. to ME(H4DOTC)-48, TIMING BELT, REMOVAL, Timing Belt.>
8) Remove the cam sprocket LH. <Ref. to ME(H4DOTC)-56, REMOVAL, Cam Sprocket.>
9) Remove the belt cover No. 2 LH.

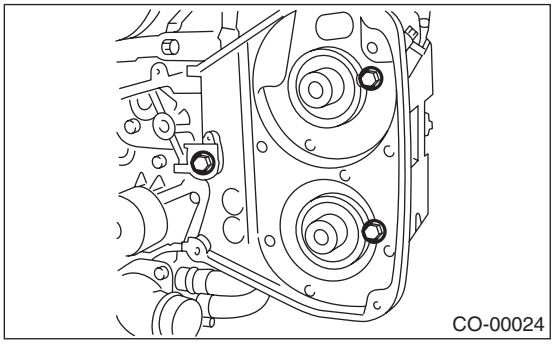

10) Remove the oil pipe.

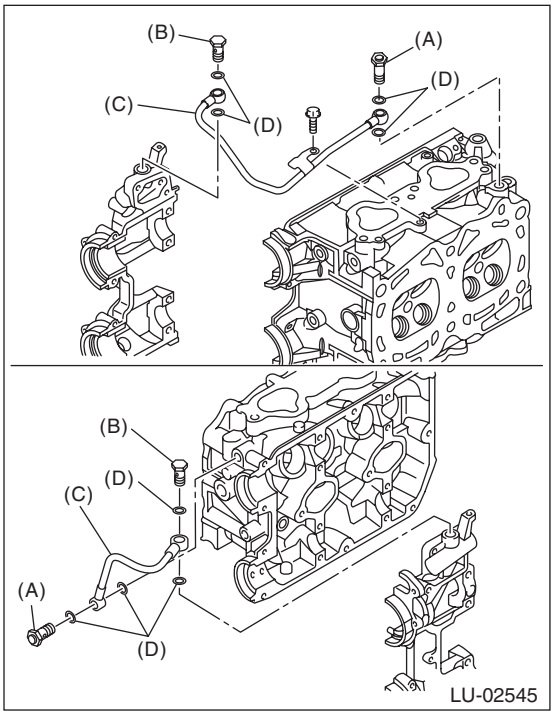

(A) Union screw with filter (with protrusion)
(B) Union screw without filter (without protrusion)
(C) Oil pipe
(D) Gasket

B: INSTALLATION

1) Inspect the union screw with filter. <Ref. to LU(H4DOTC)-24, INSPECTING UNION SCREW WITH FILTER, INSPECTION, Oil Pipe.>
2) Install the oil pipe.

NOTE:
- Make sure not to mix up the union screws with filter and without filter as their installation positions are different.
- Use a new gasket.

Tightening torque:
T1: 8 N·m (0.8 kgf-m, 5.9 ft-lb)
T2: 29 N·m (3.0 kgf-m, 21.4 ft-lb)

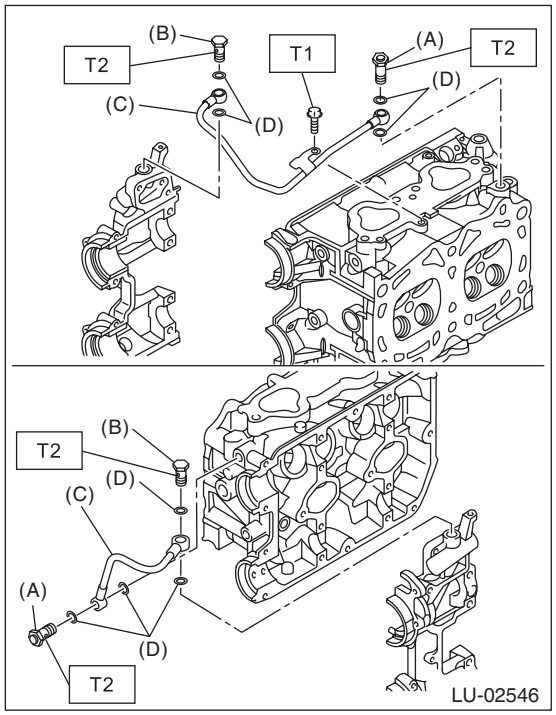

(A) Union screw with filter (with protrusion)
(B) Union screw without filter (without protrusion)
(C) Oil pipe
(D) Gasket

3) Install the belt cover No. 2 LH.

Tightening torque:
5 N·m (0.5 kgf-m, 3.7 ft-lb)

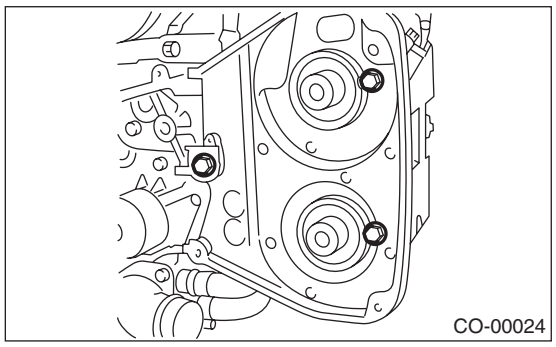

4) Install the cam sprocket LH. <Ref. to ME(H4DOTC)-56, INSTALLATION, Cam Sprocket.>
5) Install the timing belt. <Ref. to ME(H4DOTC)-51, TIMING BELT, INSTALLATION, Timing Belt.>
6) Install the timing belt cover. <Ref. to ME(H4DOTC)-47, INSTALLATION, Timing Belt Cover.>
7) Install the crank pulley. <Ref. to ME(H4DOTC)-46, INSTALLATION, Crank Pulley.>
8) Install the V-belts. <Ref. to ME(H4DOTC)-44, INSTALLATION, V-belt.>
9) Install the radiator main fan and the radiator sub fan. <Ref. to CO(H4DOTC)-30, INSTALLATION, Radiator Main Fan and Fan Motor.> <Ref. to CO(H4DOTC)-32, INSTALLATION, Radiator Sub Fan and Fan Motor.>
10) Install the intake manifold. <Ref. to FU(H4DOTC)-20, INSTALLATION, Intake Manifold.>
11) Connect the ground cable to battery.

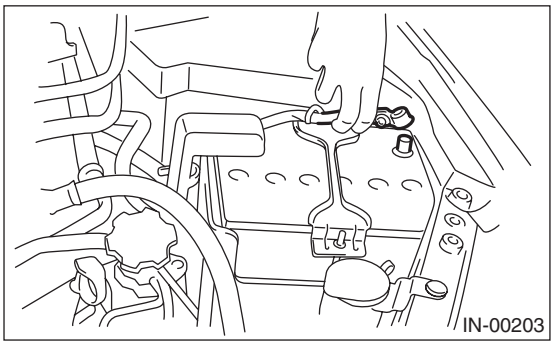

C: INSPECTION

1. INSPECTING UNION SCREW WITH FILTER

Check the filter part of union screw for clogging or damage, and if defective, replace the union screw with filter with a new part.

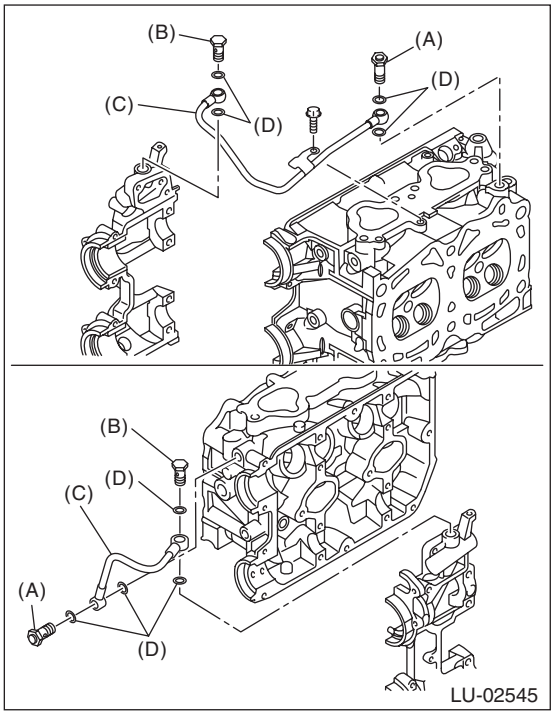

(A) Union screw with filter (with protrusion)
(B) Union screw without filter (without protrusion)
(C) Oil pipe
(D) Gasket

2. OTHER INSPECTIONS

1) Check that the oil pipe and union screw have no deformation, cracks and other damages.
2) Check that there are no oil leaks or oil oozing from the oil pipe attachment section.